Vaal Energy Toilet Seat

Range: Energy
Description: Energy toilet seat white.
Product Code: 8853Z000/N
ERP Code: CENSTWH0-8HT01
Barcode: 6002194061984
Product Features: 6 Month Warranty
Dimensions: (l) 460mm x (w) 390mm x (h) 70mm
Package Weight: 2

Product Images



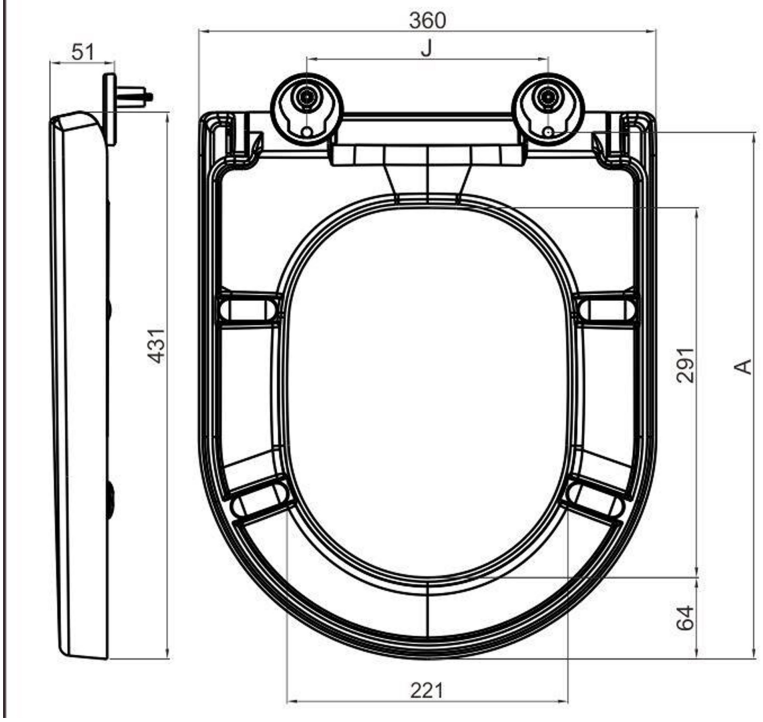

MOT

6 Month Warranty