Grohe Grohe PP-outlet bend Ø 90 mm

Range: Grohe
Description: variable depth adjustment, including lip seal DN 90
Product Code: G-42327000
ERP Code: G-42327000
Barcode: 4005176838705
Product Features: No Warranty
Dimensions: (l) 300mm x (w) 150mm x (h) 120mm
Package Weight: 0

Product Images



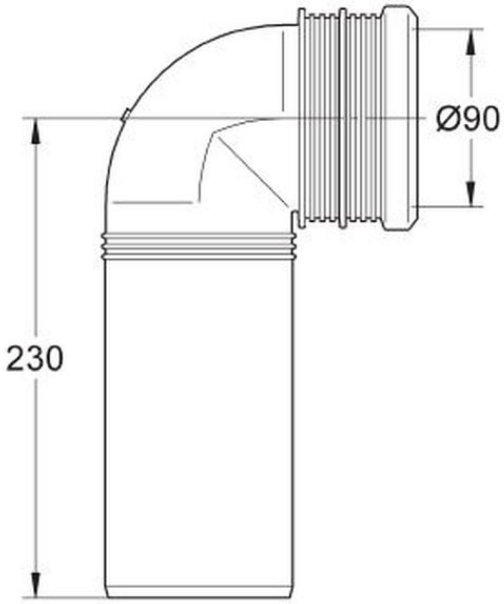

MOT