Grohe Bau WC seat soft close

Range:	Bau
Description:	The GROHE Bau Ceramic WC seat offers effortless SoftClose performance and quick release for no-fuss maintenance - with lid, quick release function, detachable, material: Duroplast, including fixation set, stainless steel hinges, easy fixation from above, compatible with all Bau Ceramic bowls except 39 910 000
Product Code:	G-39493000
ERP Code:	G-39493000
Barcode:	4005176450020
Product Features:	6 Month Warranty
Dimensions:	(l) 383mm x (w) 49mm x (h) 460mm
Package Weight:	2
CAD3D:	Download

Product Images



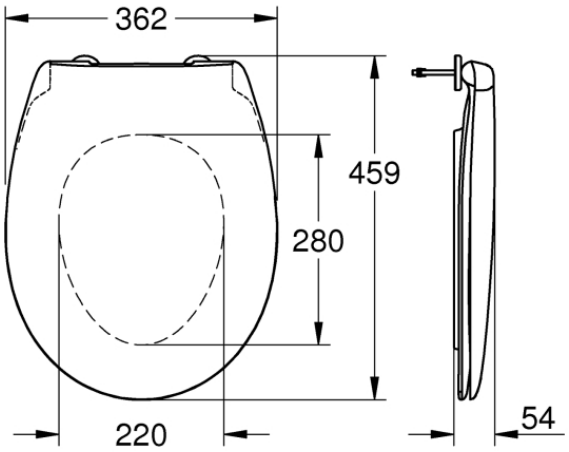

MOT

6 Month Warranty