Grohe Cube WC seat soft close

Range:	Cube
Description:	The GROHE Cube Ceramic WC seat – SoftClose function and swift release for easier cleaning - with lid, quick release function, detachable, material: Duroplast, including fixation set, stainless steel hinges, easy fixation from above, weight bearing capacity 150 kg, compatible with all Cube Ceramic bowls
Product Code:	G-39488000
ERP Code:	G-39488000
Barcode:	4005176442735
Product Features:	6 Month Warranty
Dimensions:	(l) 383mm x (w) 49mm x (h) 460mm
Package Weight:	3
CAD3D:	Download

Product Images

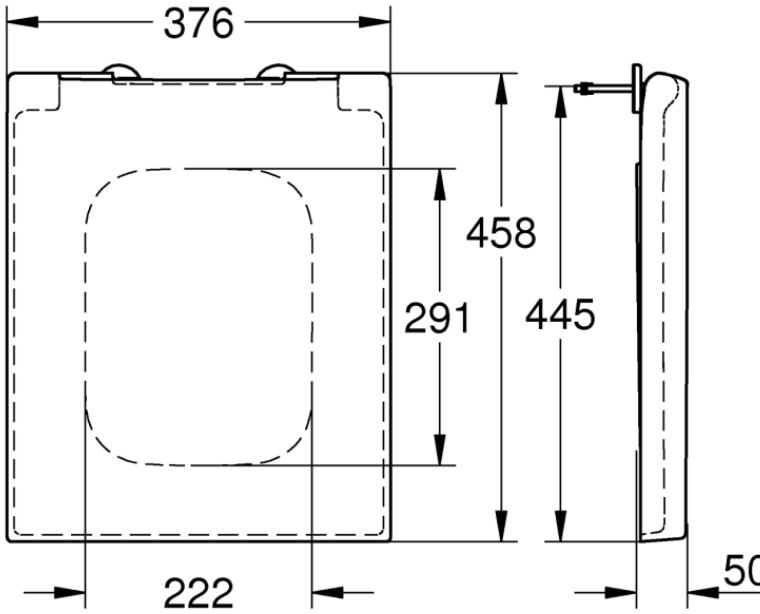

MOT

6 Month Warranty