Grohe Relexa 70 Sports head shower 1 spray

Range:	Relexa 70
Description:	low aerosol emission, heavy, cast model, theft proof, connection thread 1/2", projection 57 mm, flow limiter 9 l/min. and 12 l/min., GROHE DreamSpray perfect spray pattern, GROHE Long-Life finish, SpeedClean anti-limescale system, Inner WaterGuide for a longer life, suicide resistant design, pipe union plug-in for wall connection
Product Code:	G-28002000
ERP Code:	G-28002000
Barcode:	4005176858796
Product Features:	GROHE DreamSpray, 5 Year Warranty, GROHE Long-Life finish
Dimensions:	(l) 110mm x (w) 65mm x (h) 150mm
Package Weight:	0
CAD3D:	Download

Product Images



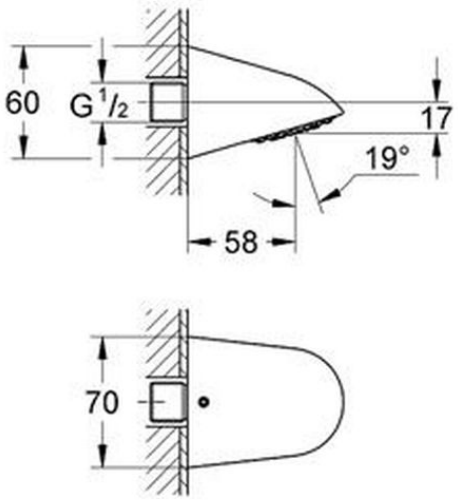

Flow Chart

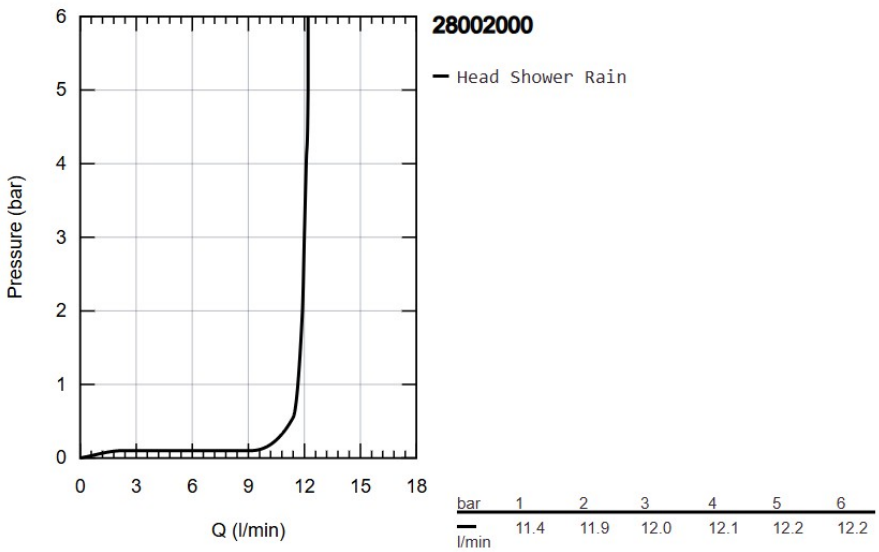

MOT



GROHE DreamSpray



5 Year Warranty



GROHE Long-Life finish