# Grohe Euphoria Cube 150 Head shower 1 spray

| | |
|---|---|
| **Range:** | Euphoria Cube 150 |
| **Description:** | Shower enjoyment, squared – the chic, perfectly square GROHE Euphoria Cube 150 shower head makes a real statement - Rain spray pattern, maximum flow rate (at 3 bar): 8 l/min, 152 x 152 mm, ball-joint, rotation angle ± 12°, connection thread 1/2", GROHE Water Saving - Less water, perfect flow, GROHE DreamSpray perfect spray pattern, GROHE Long-Life finish, SpeedClean anti-limescale system, Inner WaterGuide for a longer life |
| **Product Code:** | G-27705000 |
| **ERP Code:** | G-27705000 |
| **Barcode:** | 4005176907166 |
| **Product Features:** | GROHE DreamSpray, 5 Year Warranty, GROHE Long-Life finish, GROHE Water Saving |
| **Dimensions:** | (l) 205mm x (w) 70mm x (h) 210mm |
| **Package Weight:** | 0 |
| **CAD3D:** | Download |

Product Images



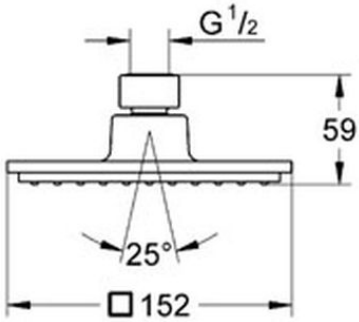


Flow Chart

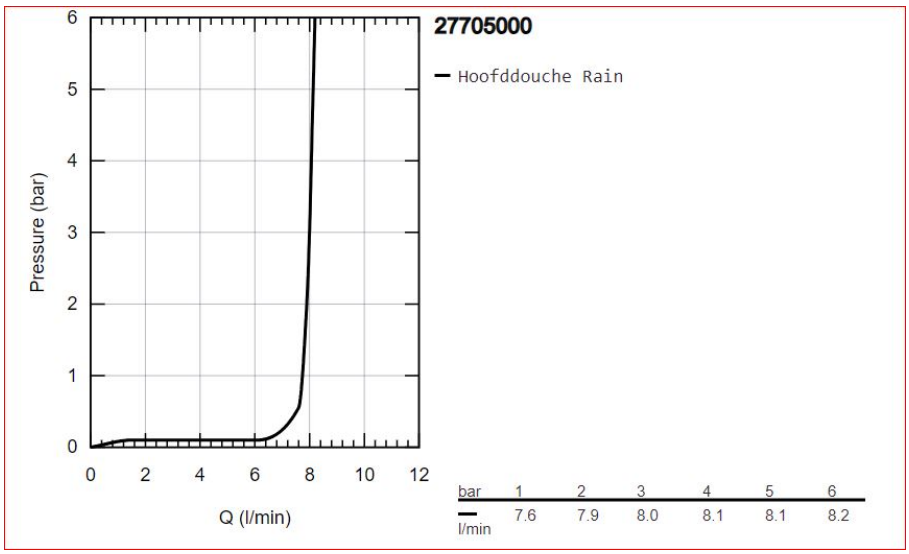

MOT



GROHE DreamSpray




5 Year Warranty



GROHE Long-Life finish



GROHE Water Saving