Grohe Tempesta 100 Head shower 4 sprays

Range:	Tempesta 100
Description:	spray patterns: GROHE Rain O², Rain, Massage, Jet, maximum flow rate (at 3 bar): 9 l/min, connection thread 1/2", GROHE Water Saving - Less water, perfect flow, GROHE DreamSpray perfect spray pattern, GROHE Long-Life finish, SpeedClean anti-limescale system, Inner WaterGuide for a longer life
Product Code:	G-27606001
ERP Code:	G-27606001
Barcode:	4005176444180
Product Features:	GROHE DreamSpray, 5 Year Warranty, GROHE Long-Life finish, GROHE Water Saving
Dimensions:	(l) 105mm x (w) 105mm x (h) 90mm
Package Weight:	0
CAD3D:	Download

Product Images



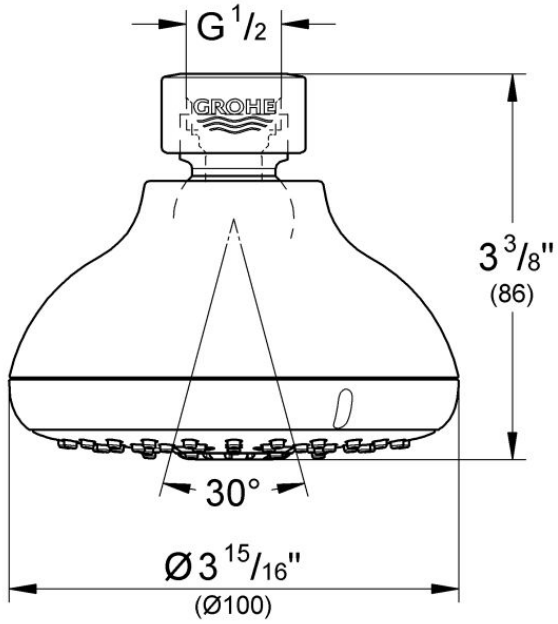

Flow Chart

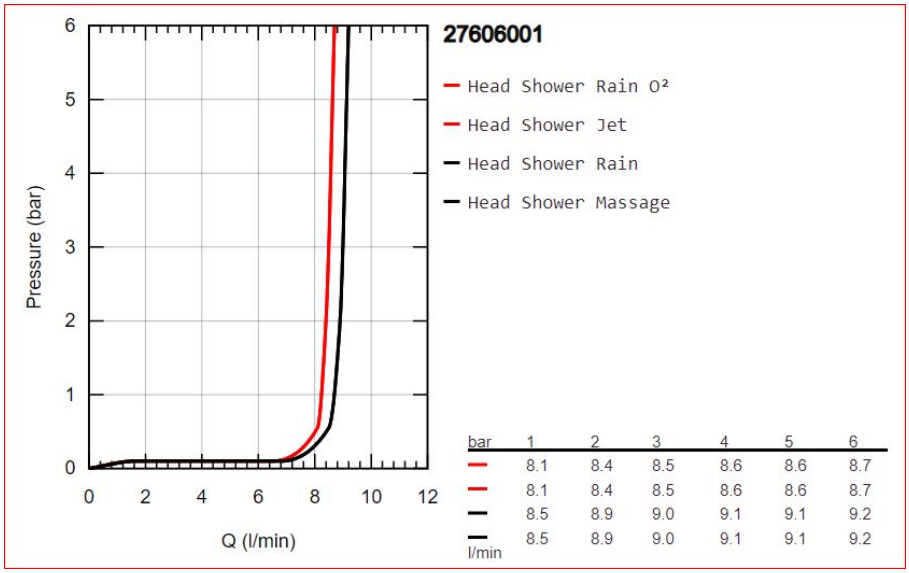

MOT



5 Year Warranty



GROHE DreamSpray



GROHE Long-Life finish



GROHE Water Saving