Grohe Euphoria Cosmopolitan 180 Head shower 1 spray

Range:	Euphoria Cosmopolitan 180
Description:	GROHE Euphoria 180 head shower: water conservation in a stylish package - Rain spray pattern, maximum flow rate (at 3 bar): 7.5 l/min, Ø 180 mm, Ball joint +/- 15° rotatable, connection thread 1/2", GROHE Water Saving - Less water, perfect flow, GROHE DreamSpray perfect spray pattern, GROHE Long-Life finish, SpeedClean anti-limescale system
Product Code:	G-27492000
ERP Code:	G-27492000
Barcode:	4005176885556
Product Features:	GROHE DreamSpray, 5 Year Warranty, GROHE Long-Life finish, GROHE Water Saving
Dimensions:	(l) 255mm x (w) 255mm x (h) 110mm
Package Weight:	0
CAD3D:	Download

Product Images



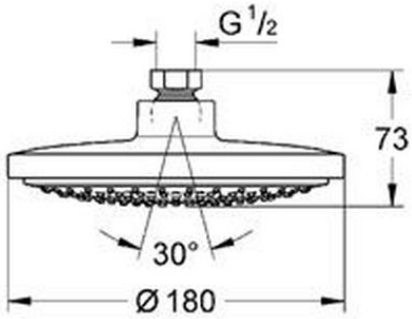

Flow Chart

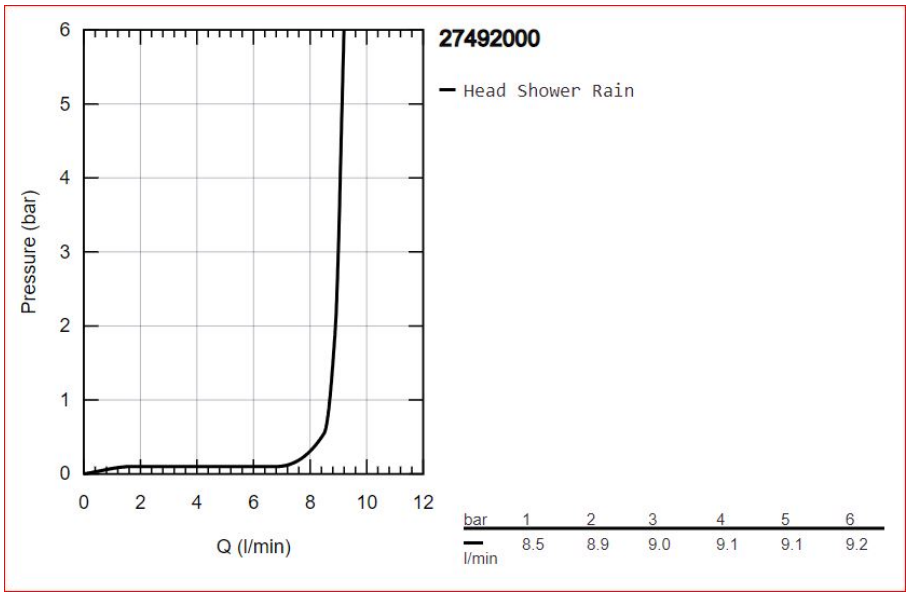

MOT



GROHE DreamSpray



5 Year Warranty



GROHE Long-Life finish



GROHE Water Saving