Grohe Rainshower Cosmopolitan 160 Head shower 4 sprays

Range:	Rainshower Cosmopolitan 160
Description:	spray patterns: Rain, Jet, Pure, Champagne spray, maximum flow rate (at 3 bar): 11.5 l/min, Ø 160 mm, ball joint with turning angle ± 15°, connection thread 1/2", GROHE DreamSpray perfect spray pattern, GROHE Long-Life finish, SpeedClean anti-limescale system
Product Code:	G-27134000
ERP Code:	G-27134000
Barcode:	4005176836060
Product Features:	GROHE DreamSpray, 5 Year Warranty, GROHE Long-Life finish
Dimensions:	(l) 240mm x (w) 200mm x (h) 125mm
Package Weight:	0
CAD3D:	Download

Product Images



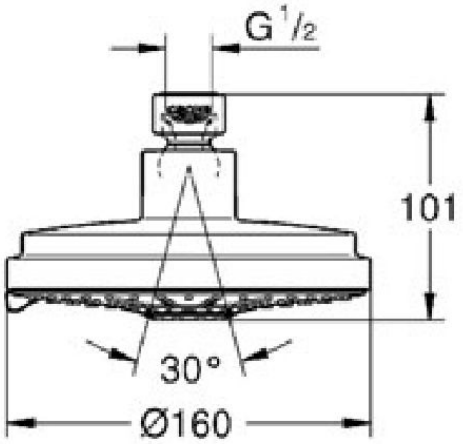

Flow Chart

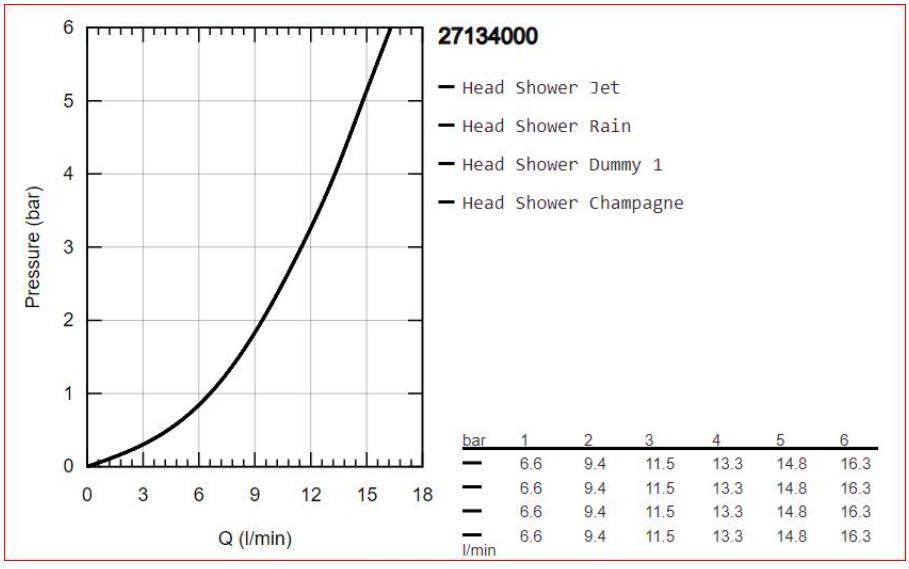

MOT



5 Year Warranty



GROHE DreamSpray



GROHE Long-Life finish