Grohe Rainshower Cosmopolitan 310 Head shower set 380 mm, 1 spray

Range:	Rainshower Cosmopolitan 310
Description:	Designer style meets showering luxury – GROHE Rainshower Cosmopolitan 310 head shower set in Brushed Hard Graphite - Consisting of:, head shower Rainshower Cosmopolitan 310, material: metal, Rain spray pattern, maximum flow rate (at 3 bar): 8 l/min, shower arm Rainshower 380 mm, GROHE Water Saving - Less water, perfect flow, GROHE DreamSpray perfect spray pattern, GROHE Long-Life finish, SpeedClean anti-limescale system
Product Code:	G-26066AL0
ERP Code:	G-26066AL0
Barcode:	4005176427220
Product Features:	GROHE DreamSpray, 5 Year Warranty, GROHE Long-Life finish, GROHE Water Saving
Dimensions:	(l) 390mm x (w) 370mm x (h) 105mm
Package Weight:	4
CAD3D:	Download

Product Images



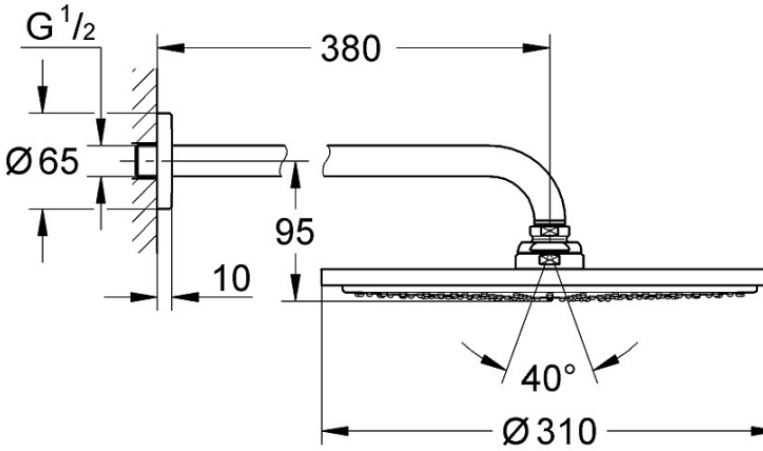

Flow Chart

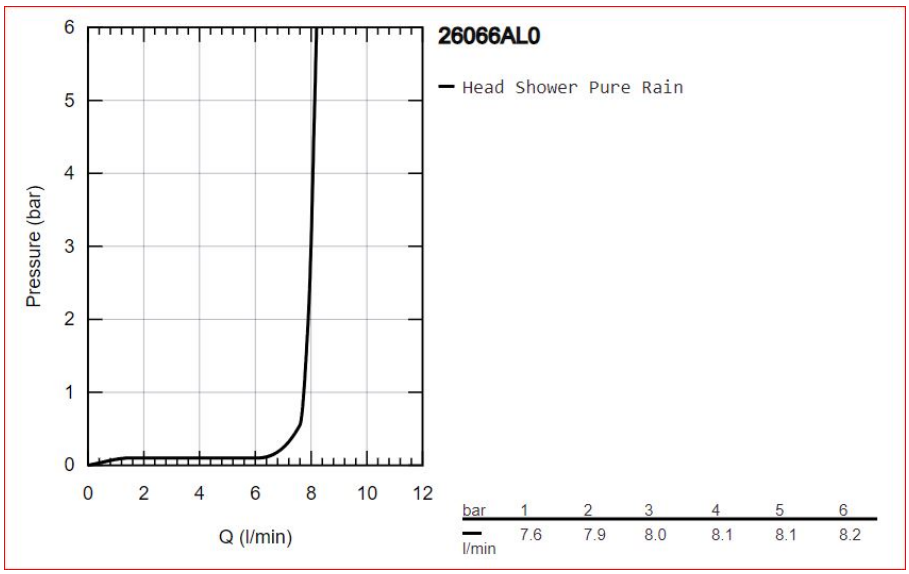

MOT



5 Year Warranty



GROHE DreamSpray



GROHE Long-Life finish



GROHE Water Saving