Grohe Rainshower Cosmopolitan 210 Head shower set 286 mm, 1 spray

Range:	Rainshower Cosmopolitan 210
Description:	metal head shower Rainshower Cosmopolitan 210 (28 368 000), Rain spray pattern, Shower arm Rainshower 286 mm (28 576 000), GROHE DreamSpray perfect spray pattern, GROHE Long-Life finish, SpeedClean anti-limescale system
Product Code:	G-26052000
ERP Code:	G-26052000
Barcode:	4005176937064
Product Features:	GROHE DreamSpray, 5 Year Warranty, GROHE Long-Life finish
Dimensions:	(l) 255mm x (w) 255mm x (h) 110mm
Package Weight:	2
CAD3D:	Download

Product Images



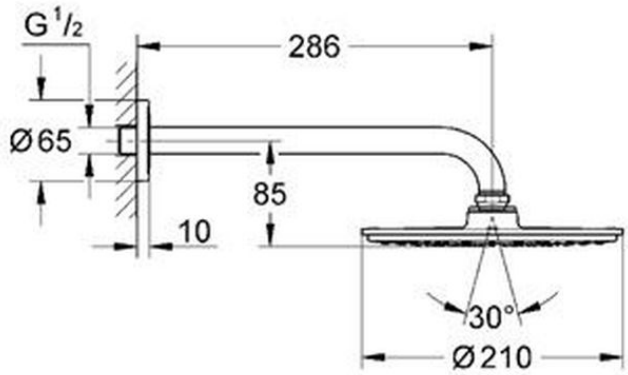

Flow Chart

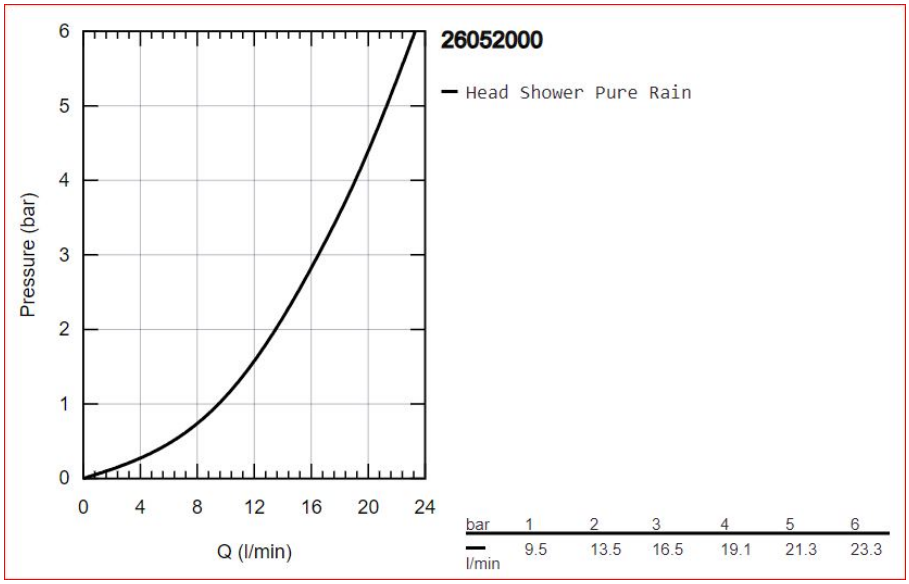

MOT



GROHE DreamSpray



5 Year Warranty



GROHE Long-Life finish