Grohe Lineare Single-lever basin mixer 1/2S-Size

Range:	Lineare
Description:	The GROHE Lineare single-lever basin mixer with standard high spout – elegance and water-saving performance! - monobloc installation, metal lever, 28 mm ceramic cartridge , with GROHE SilkMove, with temperature limiter, GROHE Long-Life finish, GROHE Water Saving - Less water, perfect flow, maximum flow rate (at 3 bar): 5 l/min, SpeedClean mousseur, GROHE FastFixation Plus installation system, smooth body with push-open waste set 1 1/4", flexible connection hoses
Product Code:	G-23106001
ERP Code:	G-23106001
Barcode:	4005176409110
Product Features:	GROHE SilkMove, 20 Year Warranty, GROHE Long-Life finish, GROHE Water Saving
Dimensions:	(l) 325mm x (w) 235mm x (h) 65mm
Package Weight:	1
CAD3D:	Download

Product Images



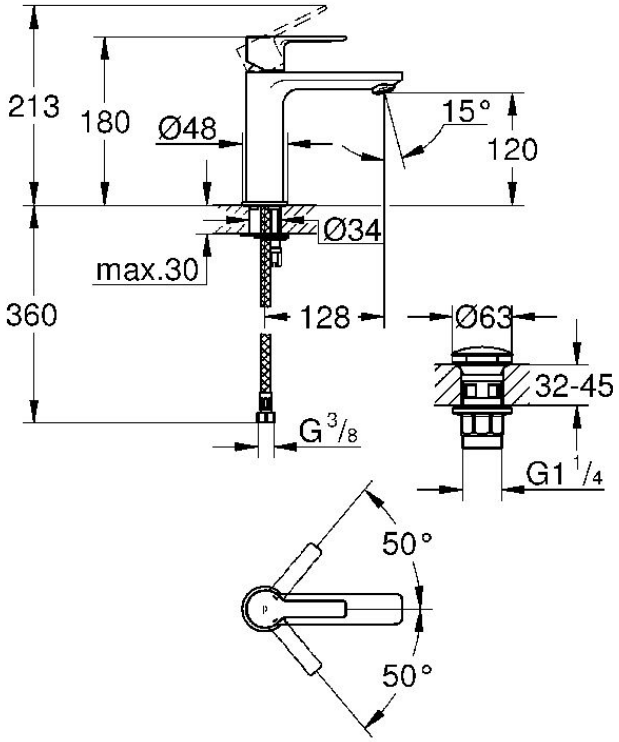

Flow Chart

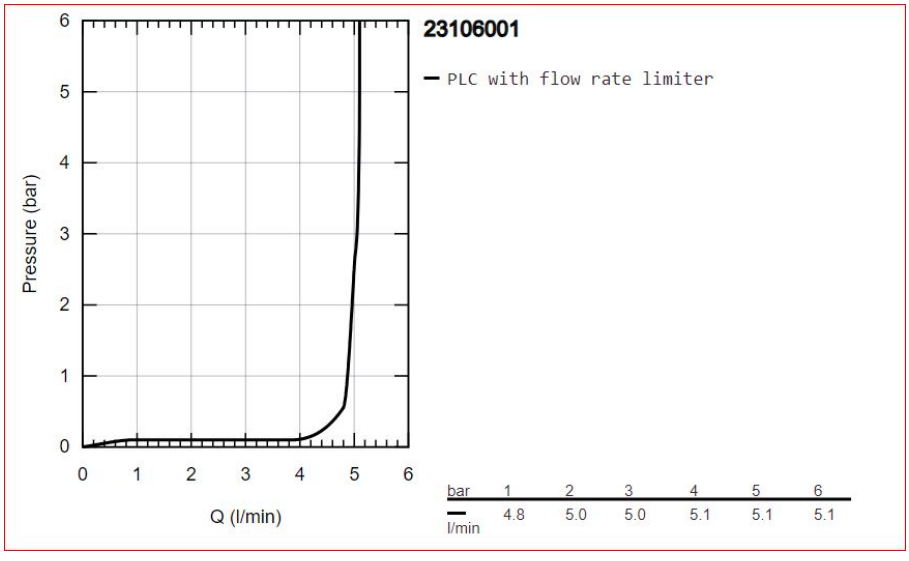

MOT



20 Year Warranty



GROHE SilkMove



GROHE Long-Life finish



GROHE Water Saving