Grohe Grohe Angle valve 1/2

Range:	Grohe
Description:	without compression nut, for copper pipe Ø 10 mm, TDL handle, marking: neutral, escutcheon, GROHE Long-Life finish
Product Code:	G-22940000
ERP Code:	G-22940000
Barcode:	4005176829376
Product Features:	2 Year Warranty, GROHE Long-Life finish
Dimensions:	(l) 120mm x (w) 80mm x (h) 45mm
Package Weight:	0
CAD3D:	Download

Product Images



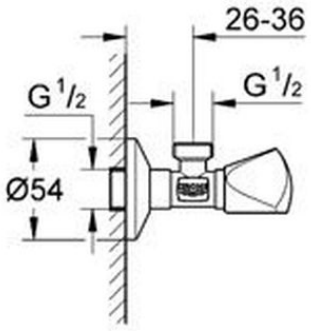

MOT

2 Year Warranty

GROHE Long-Life finish