Grohe Grohe Angle valve 1/2

Range:	Grohe
Description:	The GROHE angle valve in chic chrome – the perfect match to our taps, showers and accessories with lustrous chrome coating - pre-roughened connection thread for easy sealing, wall connection 1/2", outlet thread 3/8", with length compensation, with compression nut Ø 10 mm, water protected spindle shutoff, brass,, with grease chamber and double o-ring sealing, long connecting shaft, ergonomic metal handle, marking: neutral, metal push-on escutcheon Ø 55 mm, GROHE Long-Life finish
Product Code:	G-22037000
ERP Code:	G-22037000
Barcode:	4005176305535
Product Features:	GROHE StarLight, 2 Year Warranty
Dimensions:	(l) 96mm x (w) 63mm x (h) 38mm
Package Weight:	0

Product Images



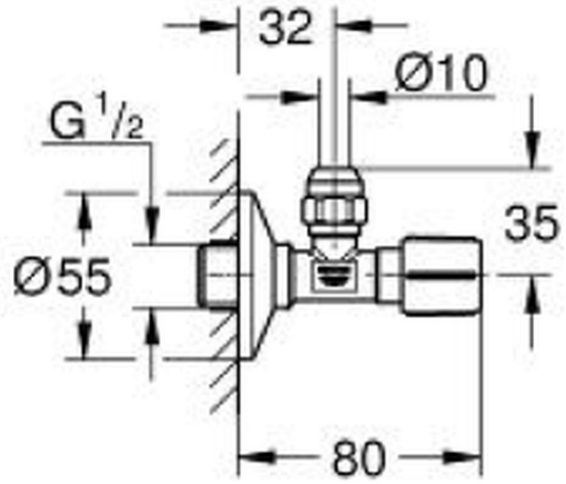

MOT

GROHE StarLight

2 Year Warranty