Grohe Essence Two-hole basin mixerM-Size

Range:	Essence
Description:	GROHE Essence 2-hole basin tap – minimalist looks for wall-mounting - wall mounted, set for final installation for, 23 571 000 / 32 635 000, without concealed body, metal escutcheon, metal lever, GROHE Long-Life finish, GROHE Water Saving mousseur 5.7 l/min, GROHE AquaGuide adjustable mousseur, centre distance 110 mm, projection 183 mm
Product Code:	G-19408001
ERP Code:	G-19408001
Barcode:	4005176307133
Product Features:	GROHE AquaGuide, 20 Year Warranty, GROHE Long-Life finish, GROHE Water Saving
Dimensions:	(l) 350mm x (w) 170mm x (h) 80mm
Package Weight:	0
CAD3D:	Download

Product Images



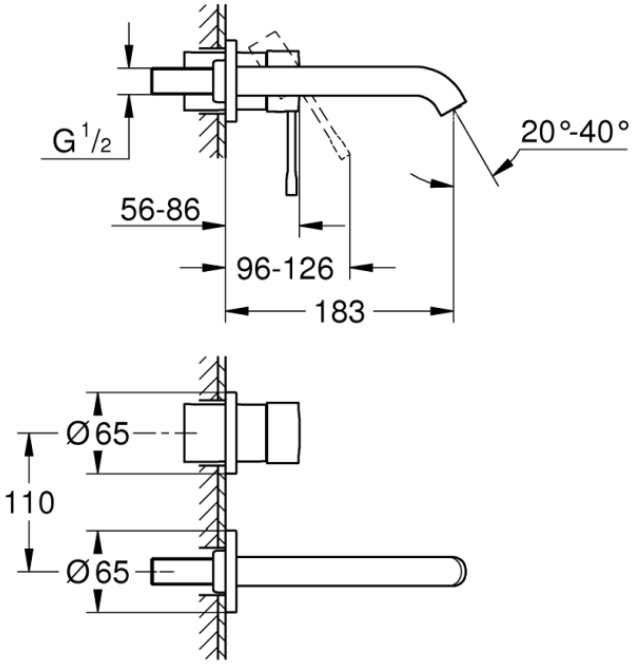

Flow Chart

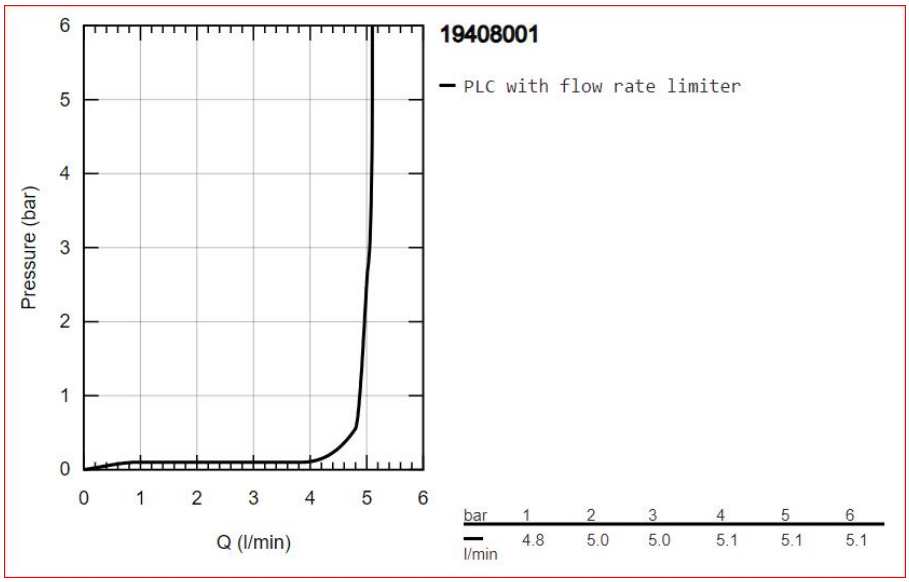

MOT



20 Year Warranty



GROHE AquaGuide



GROHE Long-Life finish



GROHE Water Saving