Grohe Eurosmart Cosmopolitan Two-hole basin mixerS-Size

Range:	Eurosmart Cosmopolitan
Description:	GROHE Eurosmart Cosmopolitan two-hole basin tap – adjustable aerator for the ideal water spray - wall mounted, set for final installation for, 23 571 000 / 32 635 000, without concealed body, metal escutcheon, metal lever, GROHE Long-Life finish, GROHE AquaGuide adjustable mousseur, centre distance 110 mm, projection 170 mm
Product Code:	G-19381000
ERP Code:	G-19381000
Barcode:	4005176874673
Product Features:	GROHE AquaGuide, 20 Year Warranty, GROHE Long-Life finish
Dimensions:	(l) 390mm x (w) 200mm x (h) 100mm
Package Weight:	1
CAD3D:	Download

Product Images



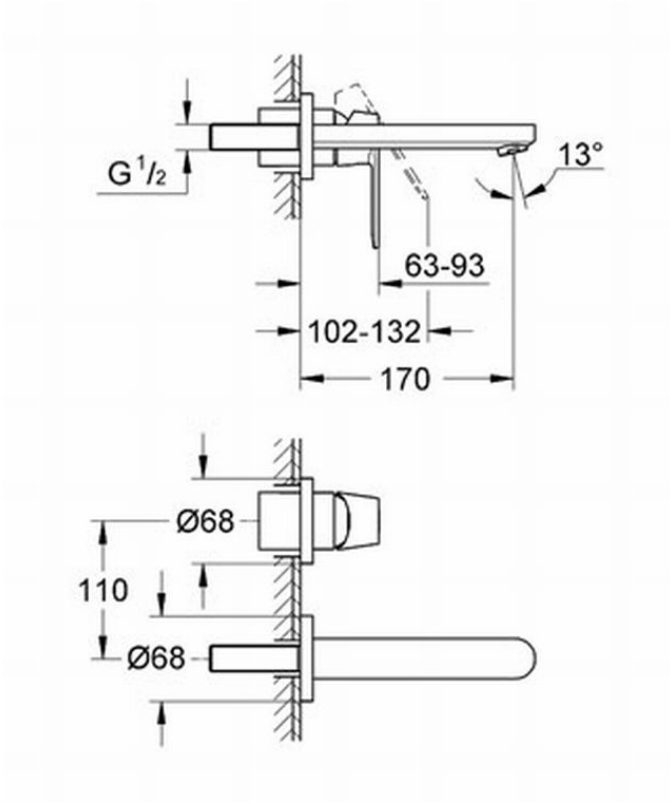

Flow Chart

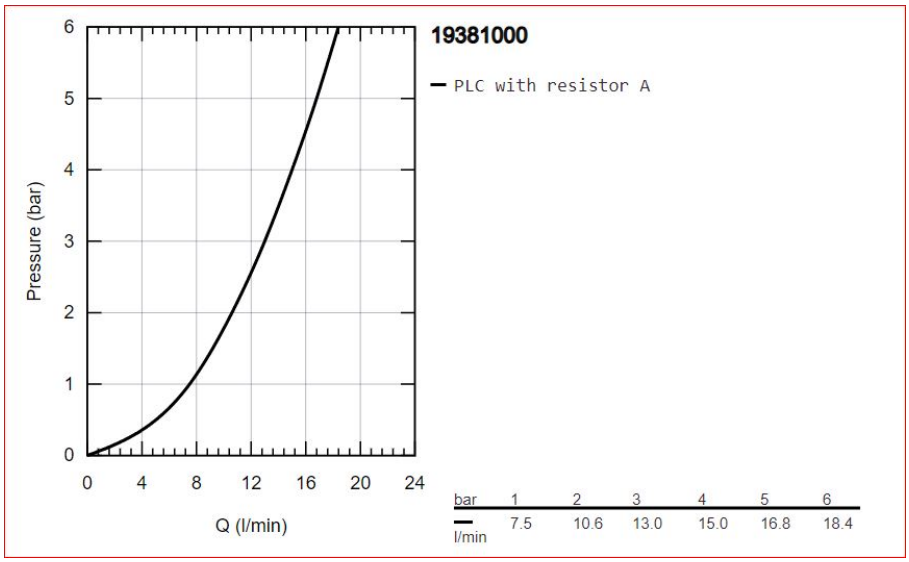

MOT



20 Year Warranty



GROHE AquaGuide



GROHE Long-Life finish