Grohe Grohe Universal 25mm extension se

Range: Grohe
Description: fits for concealed single-lever mixers in combination with GROHE Rapido SmartBox
Product Code: G-14056000
ERP Code: G-14056000
Barcode: 4005176466298
Product Features: No Warranty
Dimensions: (l) 168mm x (w) 90mm x (h) 52mm
Package Weight: 0

Product Images

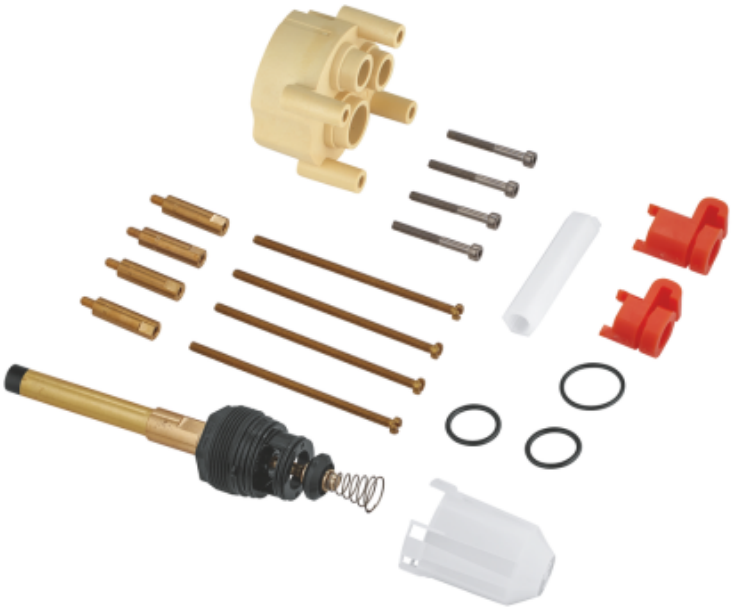

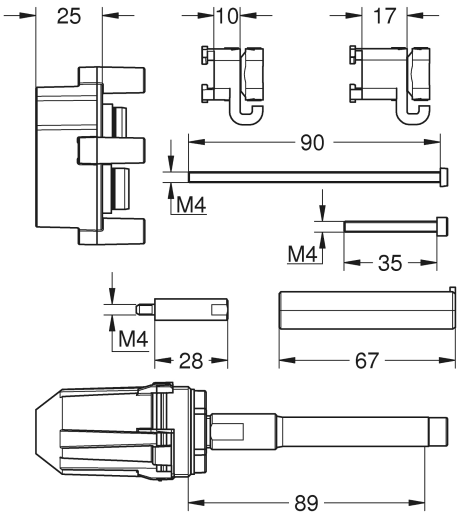

MOT