Grohe Tempesta Wall Hand Shower Holder

Range:	Tempesta
Description:	This GROHE Tempesta adjustable wall holder offers excellent quality and matches the broad GROHE range in stunning matt black - adjustable, professional edition
Product Code:	275952431
ERP Code:	275952431
Barcode:	4067393016113
Product Features:	5 Year Warranty
Dimensions:	(l) 95mm x (w) 71mm x (h) 81mm
Package Weight:	0
CAD3D:	Download

Product Images

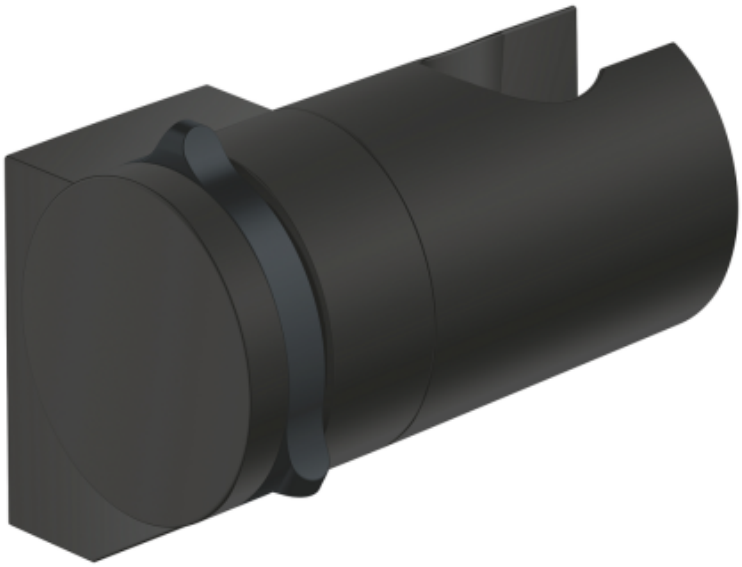

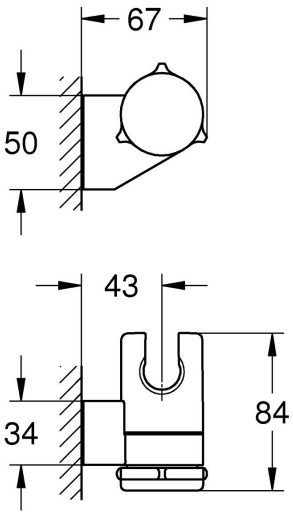

MOT

5 Year Warranty