Grohe Grohe Angle Valve 1/2"

Range:	Grohe
Description:	pre-roughened connection thread for easy sealing, wall connection 1/2", outlet thread 3/8", with length compensation, with compression nut Ø 10 mm, water protected spindle shutoff, brass,, with grease chamber and double o-ring sealing, long connecting shaft, ergonomic metal handle, marking: neutral, metal push-on escutcheon Ø 55 mm, GROHE Long-Life finish
Product Code:	22037DC0
ERP Code:	22037DC0
Barcode:	4005176468087
Product Features:	2 Year Warranty
Dimensions:	(l) 90mm x (w) 60mm x (h) 35mm
Package Weight:	0

Product Images



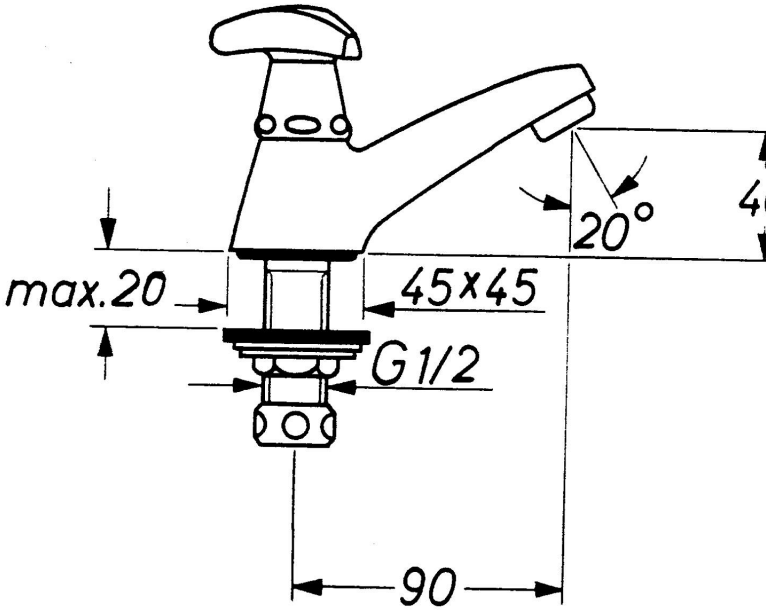

MOT

2 Year Warranty