Grohe Euro 2.0 Wall hung WC set soft square

Range:	Euro 2.0
Description:	AVAILABLE AUG/SEP 2025 dimensions: 372 x 553 mm height: 363 mm wash down horizontal outlet for concealed cistern flush volume 4.5/3 l HyperClean AquaCeramic rimless fully skirted bowl including fixation set
Product Code:	104583SH00
ERP Code:	104583SH00
Barcode:	4067393036180
Product Features:	10 Year Warranty
Dimensions:	(l) 565mm x (w) 392mm x (h) 66mm
Package Weight:	28
CAD3D:	Download

Product Images



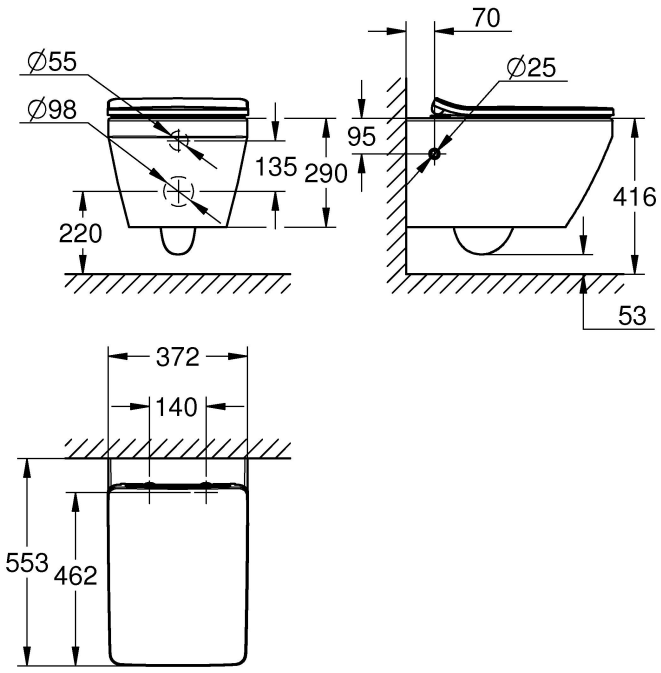

MOT

10 Year Warranty