Cobra Cobra Angle Valve

Range:	Cobra
Description:	Angle regulating valve with durable ABS handle, DZR body, flow regulating spindle type headpart G1/2 X G1/2 BSP connections.
Product Code:	232-10/NV
ERP Code:	1072920000
Barcode:	6002194158981
Product Features:	Cobra PureShine, Cobra TeamAssist, DZR Brass, 2 Year Warranty, JaswicApproved
Dimensions:	(l) 120mm x (w) 120mm x (h) 10mm
Package Weight:	0

Product Images



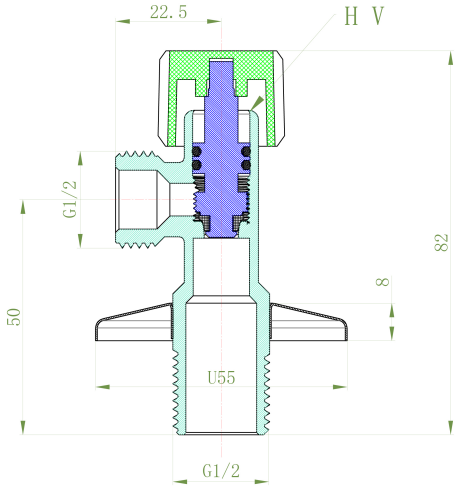

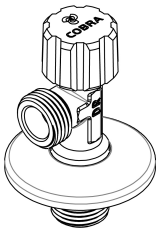

MOT

Cobra TeamAssist

Cobra PureShine

2 Year Warranty

JaswicApproved

DZR Brass