Cobra Cobra Bath Filler

Range: Cobra

Description: Bath filler/overflow with n.r.v. Care & Maintenace - Ensure your product does not come into contact with any lubricants during installation. Chrome plated, matte black and any colour finshes should be wiped with warm soapy water and a soft cloth or sponge. Rinse, then dry and buff with a dry soft cloth. Under no circumstances must any detergents containing hydrochloric acids or abrasives including cream cleansers be used. Do not use abrasive cleaning materials such as scourers. Should your product have an aerator at the water outlet, it should be checked and cleaned regularly.

Product Code: 1811CH/N

ERP Code: FSP001BT-0GP01

Barcode: 6002194033325

Product Features: Cobra PureShine, Cobra TeamAssist, 20 Year Warranty

Dimensions: (l) 460mm x (w) 313mm x (h) 295mm

Package Weight: 0.6

Product Images

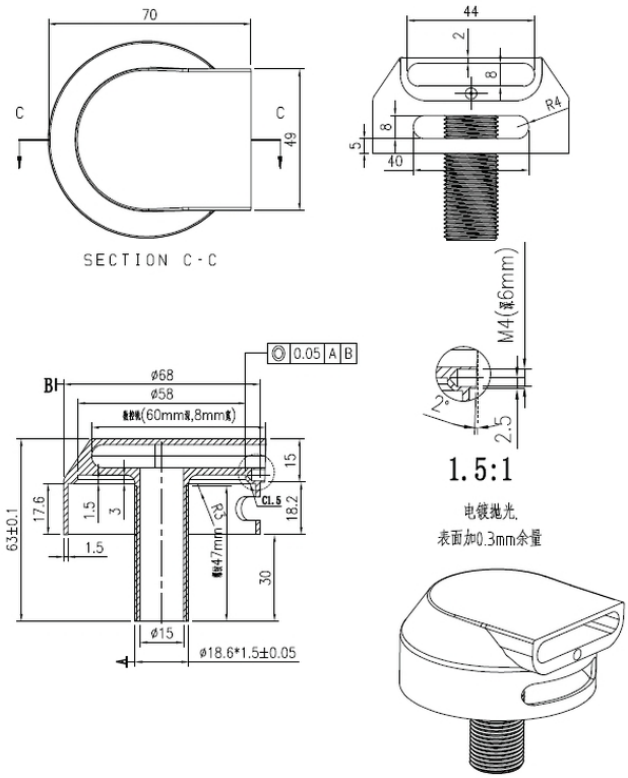

MOT

Cobra PureShine

Cobra TeamAssist

20 Year Warranty