Grohe Tempesta Cosmopolitan 100 Head shower set 3 sprays

Range:	Tempesta Cosmopolitan 100
Description:	spray patterns: GROHE Rain O², Rain, Massage, maximum flow rate (at 3 bar): 12 l/min, Ball joint +/- 15° rotatable, shower arm with connection thread 1/2", escutcheon, GROHE DreamSpray perfect spray pattern, GROHE Long-Life finish, SpeedClean anti-limescale system, Inner WaterGuide for a longer life, suitable for instantaneous heater
Product Code:	G-26090001
ERP Code:	G-26090001
Barcode:	4005176443992
Product Features:	GROHE DreamSpray, 5 Year Warranty, GROHE Long-Life finish
Dimensions:	(l) 150mm x (w) 100mm x (h) 115mm
Package Weight:	0
CAD3D:	Download

Product Images



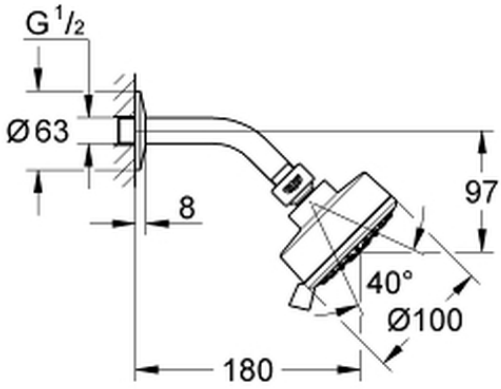

Flow Chart

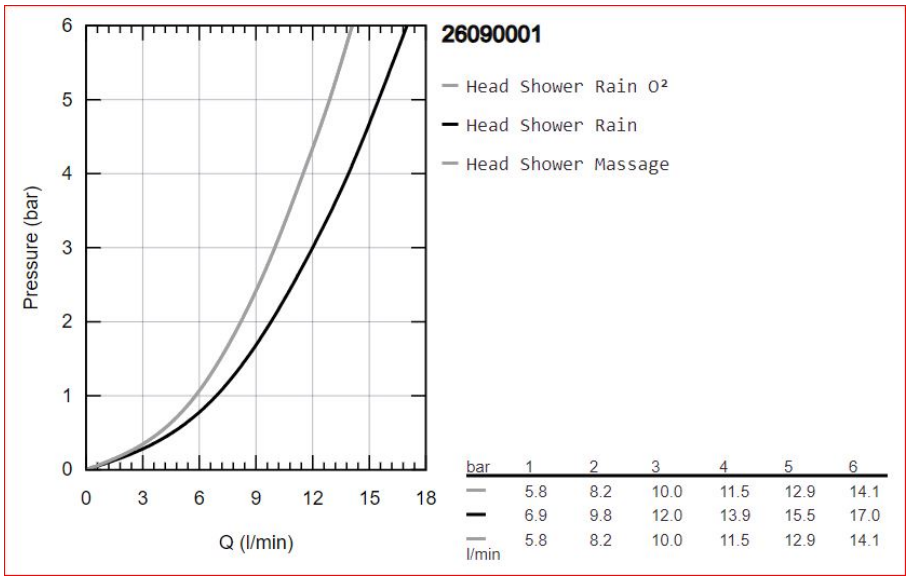

MOT



5 Year Warranty



GROHE DreamSpray



GROHE Long-Life finish